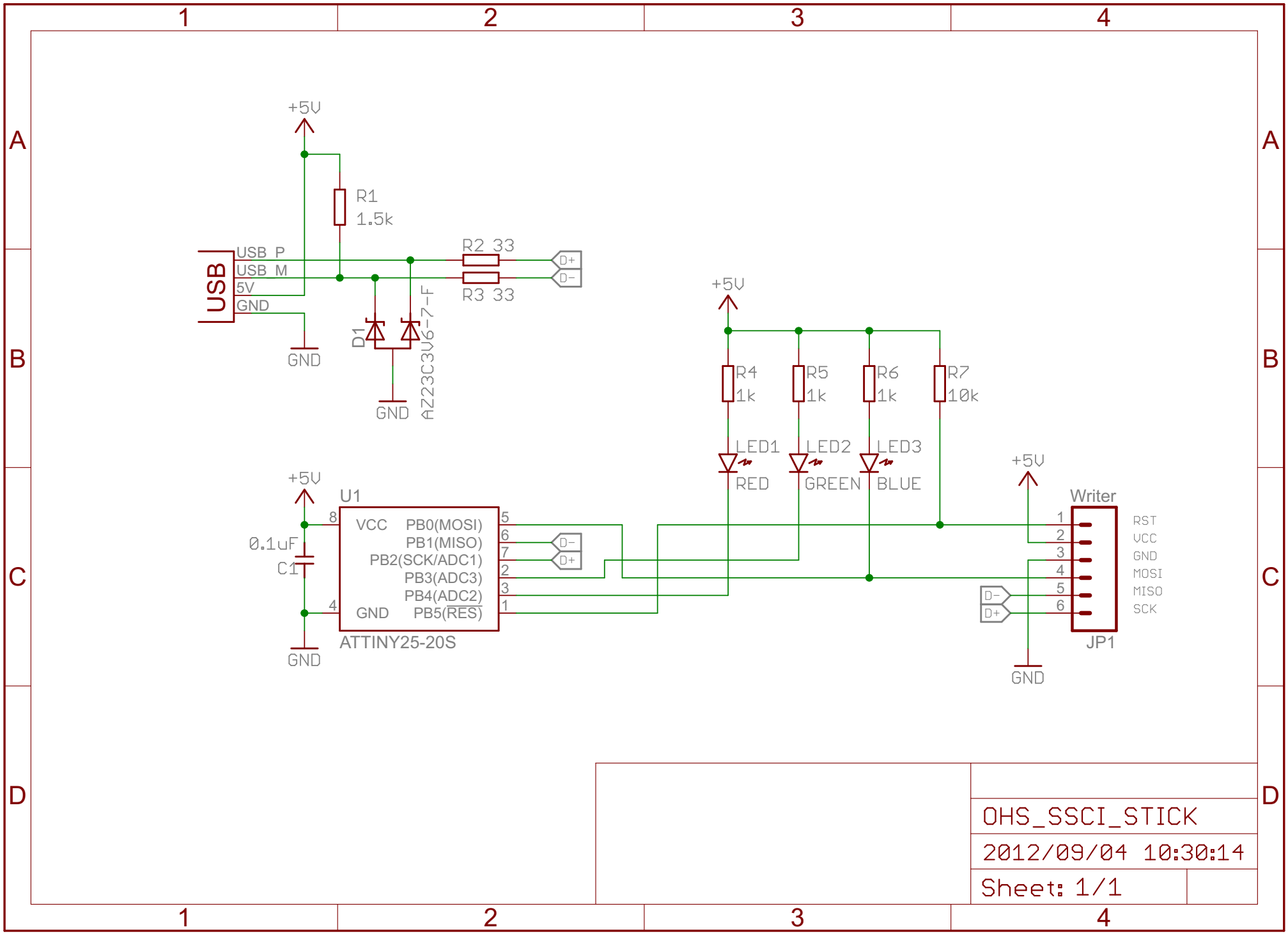
+5V
R1
1.5k
USB
USB_P
USB_M
5V
GND
R2 33
R3 33
D+
D-
D1
AZ23C3V6-7-F
GND
GND
+5V
R4
1k
R5
1k
R6
1k
R7
10k
LED1
RED
LED2
GREEN
LED3
BLUE
+5V
U1
0.1uF
C1
VCC
PB0(MOSI)
PB1(MISO)
PB2(SCK/ADC1)
PB3(ADC3)
PB4(ADC2)
GND
PB5(RES)
ATTINY25-20S
GND
+5V
Writer
RST
VCC
GND
MOSI
MISO
SCK
JP1
GND
OHS_SSCI_STICK
2012/09/04 10:30:14
Sheet: 1/1